A. E. A.
Tune-Up System

WIRING DIAGRAM
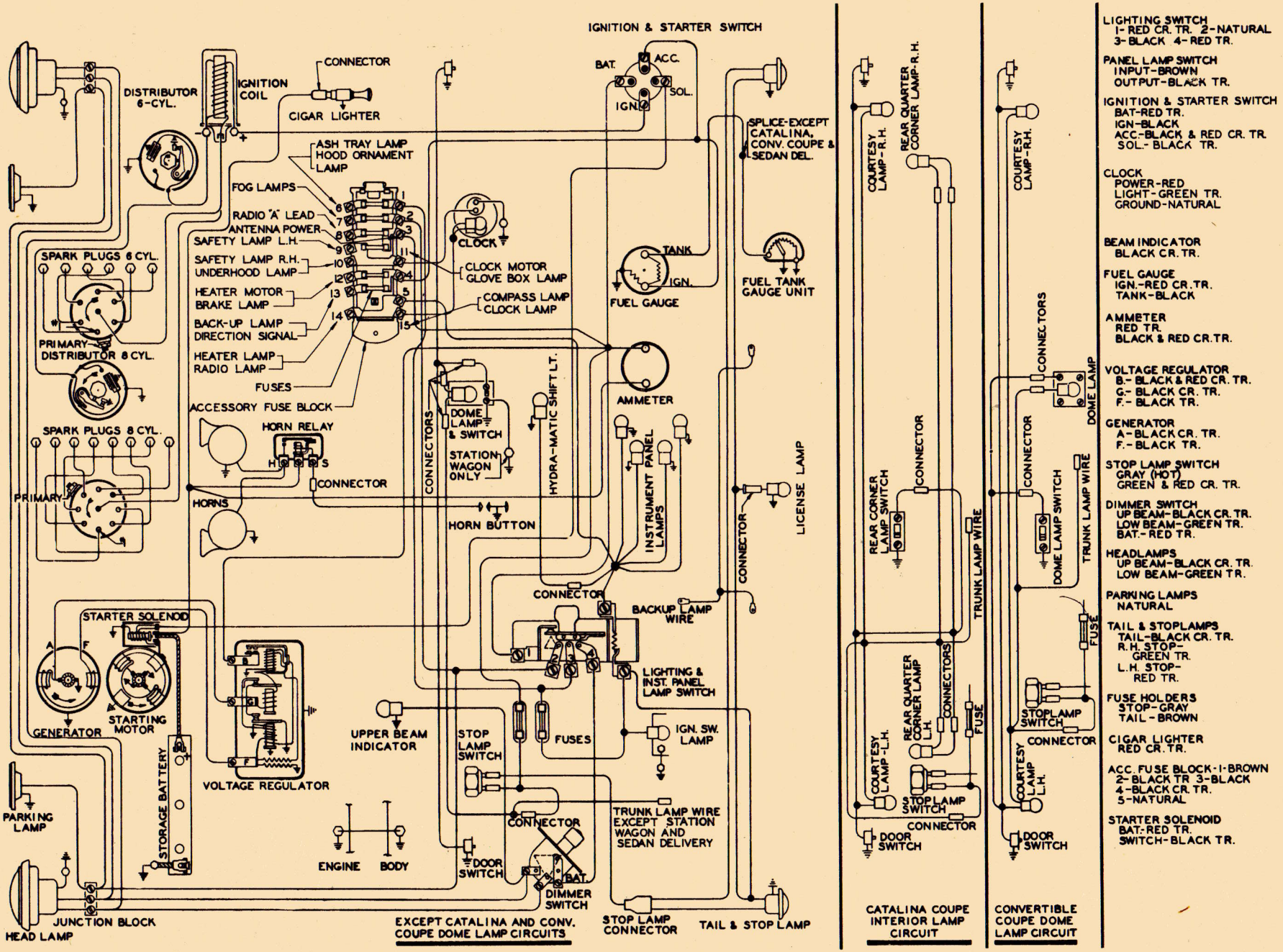
FORM NO. PO-46